To	Hyundai Rotem Company	Rev.	Date	Written	Approved
		A	Aug.23, '11	T.Shibata K.Nishikawa	T.Matsumoto
Project	Denver RTD Eagle Project	B	Sep.26, '11	T.Shibata, K.Nishikawa, Y.Nagatsuka	T.Mastumoto
		C	Oct.20, '11	T.Shibata, K.Nishikawa Y.Nagatsuka	T.Matsumoto
Title	Car Monitoring Network Interface of Propulsion converter/inverter	D	Nov.22, '11	T.Shibata, K.Nishikawa, Y.Nagatsuka	T.Matsumoto
		E	Dec.19, '11	T.Shibata, K.Nishikawa Y.Nagatsuka	T.Matsumoto
		Ref. No.:	HCN-L6340-10		
		Revision:	E		

This document describes the details for Car Monitoring Network Interface between Monitoring Diagnostic System (MDS) and the propulsion system for the Denver RTD Eagle Project. The details (variable names, data values, and so on) are basically the same as them about SEPTA. The changes from SEPTA are shown in the following table A(Table 1), and they are indicated by **bold and shaded text** in this document.

Copies to		MITSUBISHI ELECTRIC	Proprietary to: Traction Systems Department ITAMI WORKS Mitsubishi Electric Corporation	Date	Jun.10,'11
				Written	T. Shibata, K.Nishikawa
		This document is the property of MITSUBISHI ELECTRIC CORPORATION and must not be copied in whole or in part without permission in writing. Copyright reserved.	Issued by: Power Electronics Systems Designing Section-B	Checked	Y.Nagatsuka
				Approved	T.Matsumoto

Table 1: Changes list from SEPTA

	Description of changes	Sections (Pages)	Notes
	Subnet number	3.1 Table3 (Page 8)	Single car condition is deleted.
	Logic to identify type of car	3.2 Table4 (Page 9)	Single car condition is deleted.
A	"Error and CI is stopped" is revised.	3.2 Table4 (Page 9)	
A	"FAN stopping" and "CI is installed in the Single car" are deleted. (nvo01StatusBits)	4.2.2.1 Table6 (Page 17)	Index 44, 53
A	K Fault Detected and AK Fault Detected are revised. (nvo01StatusBits)	4.2.2.1 Table6 (Page 17)	Index 42, 43
	Silver Liner IV combined is deleted. (nvo01StatusBits2)	4.2.3.1 Table7 (Page 18)	Index 7
	Catenary voltage detected signals are deleted. (nvo01StatusBits2)	4.2.3.1 Table7 (Page 20)	Index 43, 44, 45
A	Interlock signal of Catenary Voltage Changeover Signal is deleted. (nvo01StatusBit2)	4.2.3.1 Table7 (Page 21)	Index 53
	Heater contactor status is added. (nvo01StatusBits2)	4.2.3.1 Table7 (Page 20)	Index 43
	Holding brake status is added. (nvo01StatusBits2)	4.2.3.1 Table7 (Page 20)	Index 44
	High Acceleration signal is added. (nvo01StatusBits2)	4.2.3.1 Table7 (Page 20)	Index 45
A	K Fault Detected 2 and AK Fault Detected 2 are added. (nvo01StatusBits2)	4.2.3.1 Table7 (Page 21)	~~Index 54, 55~~ BIndex 53,55[Note1]
	Train composition is added. (nvi01CDTPrameter)	4.2.5.1 Table9 (Page 23)	~~Index3~~ BIndex5[Note2]
	C/I position is added. (nvi01CDTPrameter)	4.2.5.1 Table9 (Page 23)	~~Index4~~ BIndex6[Note2]
~~B~~ E	Other C/I fault condition. (nvi01CDTPrameter)	4.2.5.1 Table9 (Page 24)	~~Index5, Note3~~ EIndex7

BNote1: Index 54 (Table 7) is the same as SEPTA, "On-demand Test result existing".
BNote2: Index 3 and 4 are the same as SEPTA.
(Index3:"Main transformer Temperature", Index4:"Primary circuit current")

Document Revisions

Revision	Date	Description of changes
0	Jun.10, '11	Original issue
A	Aug.23, '11	p.1: "(Table 1)" is added. p.2: Table 1 is revised. p.9: Table 4 is revised. p.17: Table 6 is revised. p.20, 21: Table7 is revised. P.24: Sec.4.2.5.1 ID5 is revised. p.37: Sec.6.2 is revised. ("Single car" is deleted.) p.38: Sec.6.4 is revised. ("Single car" is deleted.)
B	Sep.26, '11	The following terms are revised to reflect the result of the design meeting between Rotem and MELCO on September 22, 2011 and the latest MDS interface of C/I in SEPTA. p.2: Table 1 is revised. p.21: Table 7 Index 53,54 are revised. p.23: Table 9 Index 3,4 are revised. p.23: Table 9 Index 5,6 and Note 3 are revised. p.23,24: Table 9 "Other C/I fault condition" is deleted.
C	Oct.20,'11	p.30: Figure2 is revised. ("CDT" is revised to "MDS") p.38: Table17 is revised.
D	Nov.22, '11	p.35: Sec.5.4 Table 15 Index 296 was deleted.
E	Dec.19, '11	The following terms were revised to reflect the result of the design meeting between Denver RTD, Rotem and MELCO on December 14th, 2011. p.2: Table 1 was revised. p.23: Table 9 was revised. p.24: Note3 "ID7: Other C/I fault condition" was added.

Table of Contents

1. General ... 6
1.1 Objective ... 6
1.2 Reference documents ... 6
1.3 Abbreviations ... 6
2. Network Physical Layer Interface Design ... 6
3. Network Management ... 6
3.1 Network configuration ... 6
3.2 Node Documentation ... 6
4. Network Node ... 6
4.1 Node Object – Object #0 ... 6
4.1.1 nvi00ObjRequest ... 6
4.1.2 nvo00ObjStatus ... 6
4.1.3 nvi00TimeStamp ... 6
4.1.4 nvi00FileReq ... 6
4.1.5 nvo00FileStat ... 6
4.1.6 nci00NetConfig ... 6
4.1.7 Nvi00CDTCommand ... 6
4.2 Monitoring Object – Object #1 ... 6
4.2.1 nvi01Subscribe ... 6
4.2.2 nvo01StatusBits ... 6
4.2.3 nvo01StatusBits2 ... 6
4.2.4 nvo01Parameter ... 6
4.2.5 nvi01CDTParameter ... 6
4.2.6 nvi01TransferState ... 6
4.3 SCI Update Object – Object #2 ... 6
4.3.1 nvi02SCIUpdateReq ... 6
4.3.2 nvo02SCIUpdateResp ... 6
4.3.3 SCI Update File Transfer Details ... 6
4.4 SCI Version Object – Object #3 ... 6
4.4.1 nvo03SCIReq ... 6
4.4.2 nvo03SCIVersion ... 6
5. Network Interface ... 6
5.1 General ... 6
5.2 Subsystem Specific Network Interface Declarations ... 6
5.2.1 UNVT_CDT_command ... 6
5.3 Software Update ... 6
5.4 File Transfers ... 6
5.4.1 Log File Transfer Details ... 6
6. Self-Installation Data ... 6
6.1 Domain Configuration ... 6
6.2 Location Configuration ... 6
6.3 Address Configuration ... 6
6.4 Network Variable Configuration ... 6

List of Figures

Figure 1: Propulsion Converter/Inverter Node 6
Figure 2: Propulsion SCI Update Protocol 6

List of Tables

Table 1: Changes list from SEPTA 2
Table 2: Propulsion C/I System – Network Physical Layer Interface Design 6
Table 3: Definition in the Car Monitoring Network ICD 6
Table 4: Logic to identify type of car 6
Table 5: MDS Command 6
Table 6: Status Data Sent to MDS (nvoStatusBits) 6
Table 7: Status Data Sent to MDS (nvoStatusBits2) 6
Table 8: Parametric Data Sent to MDS 6
Table 9: Parametric Data Required from MDS 6
Table 10: SCI Update Request Value 6
Table 11: SCI Index Number Assignment 6
Table 12: Definition of SCI Update Reason Values 6
Table 13: SCI Index Number Assignment 6
Table 14: SCI Information 6
Table 15: File Transfers 6
Table 16: Address Table 6
Table 17: Network Variable Configuration 6

1. General

1.1 Objective

This document provides the interface between Propulsion Converter/Inverter and MDS.

1.2 Reference documents

TBD

1.3 Abbreviations

AC	Alternating Current
CI	Converter / Inverter
DC	Direct Current
EMU	Electric Multiple Unit
EN	European Standard
GCU	Gate Control Unit
Hz	Hertz
ICD	Interface Control Document
IGBT	Insulated Gate Bipolar Transistors
kV	kilo volt
MDS	Monitoring Diagnostic System
MELCO	Mitsubishi Electric Corporation
Mph	Miles Per Hour
Mtr	Main transformer
N/A	Not Applicable
PWM	Pulse Width Modulation
SCI	Software Configuration Item
TBD	To be Determined
UTC	Universal Time, Coordinated
VCB	Vacuum Circuit Breaker

2. Network Physical Layer Interface Design

Table 1 documents the Propulsion Converter/Inverter's network physical layer interface design.

Table 2: Propulsion C/I System – Network Physical Layer Interface Design

Feature	Subsystem Info	Notes
Network processor	Type is TMPN3150B1AFG.	
Transceiver type	Type is FFT-10A	
LEDs (Tx, Rx, Service)	Yes, mounted on the front panel of the GCU.	
Service pushbutton	Yes, mounted on front panel of the GCU.	
Common mode isolation choke	Yes, type is TTI7570	
Magnetic shield	Yes.	
Surge absorbing flash tubes	Yes, type is DSP-301N-S00B.	
Do you intend to submit the subsystem network interface design for review?	Yes.	

3. Network Management

3.1 Network configuration

Domain index, Subnet number and Node number are defined as the following table.

Table 3: Definition in the Car Monitoring Network ICD

Items	Definition in the Car Monitoring Network ICD
Domain index	0
Subnet number	**A-car of a married-pair: 1** B-car of a married-pair: 2
Node Identifier	PROP
Node Number	2
Selector Number	Based on the Table.13

All nodes shall have a default value defined in the installed software image and verified as part of the node's manufacturing process; the default value shall be CFG_LOCAL. If the value of the property is reset to CFG_EXTERNAL, it means that a network management tool has taken over the management of the node, and the node must not set its own network configuration, i.e. self-installation is disabled. Operationally, every node must first check the value of the Network Configuration Source property as part of its startup initialization and only modify its configuration tables if the property is set to CFG_LOCAL.

3.2 Node Documentation

1) Node Self-Documentation String

The Neuron C source code declaration shall be:

```
#pragma set_node_sd_string "PROP, Mitsubishi Electric, PPPP, DDDD"
```

PPPP: Supplier part number (This information will be informed by Rotem.)

DDDD: Neuron SCI revision (ex. At shipment:0000, First software change:0001,Seconary software change:0002 and so on.)

2) Node Program ID

The Neuron C source code declaration shall be:

```
#pragma set_id_string "PROP"
```

3) Node Location

The Propulsion Converter/Inverter system can sense which type of car it is installed in by using the train line signal "CN1" and "CN2". The detected logic of the GCU is shown in Table.3. The detail of this function is described in the other document; System description of Propulsion Converter/Inverter (HCN-L6340-1).

Table 4: Logic to identify type of car

	CIN1	CIN2	SUBNET/NODE NUMBER
Married car A-Car	1	0	1/2
Married car B-Car	0	1	2/2
Error and CI is stopped.	1	1	N/A
	0	**0**	**N/A**

A

"1" means "DC37.5V", "0" means "DC0V

4. Network Node

Figure 1 shows the Propulsion Converter/Inverter Node functional blocks, network variables and configuration properties. The following subsections provide network variable and configuration property details.

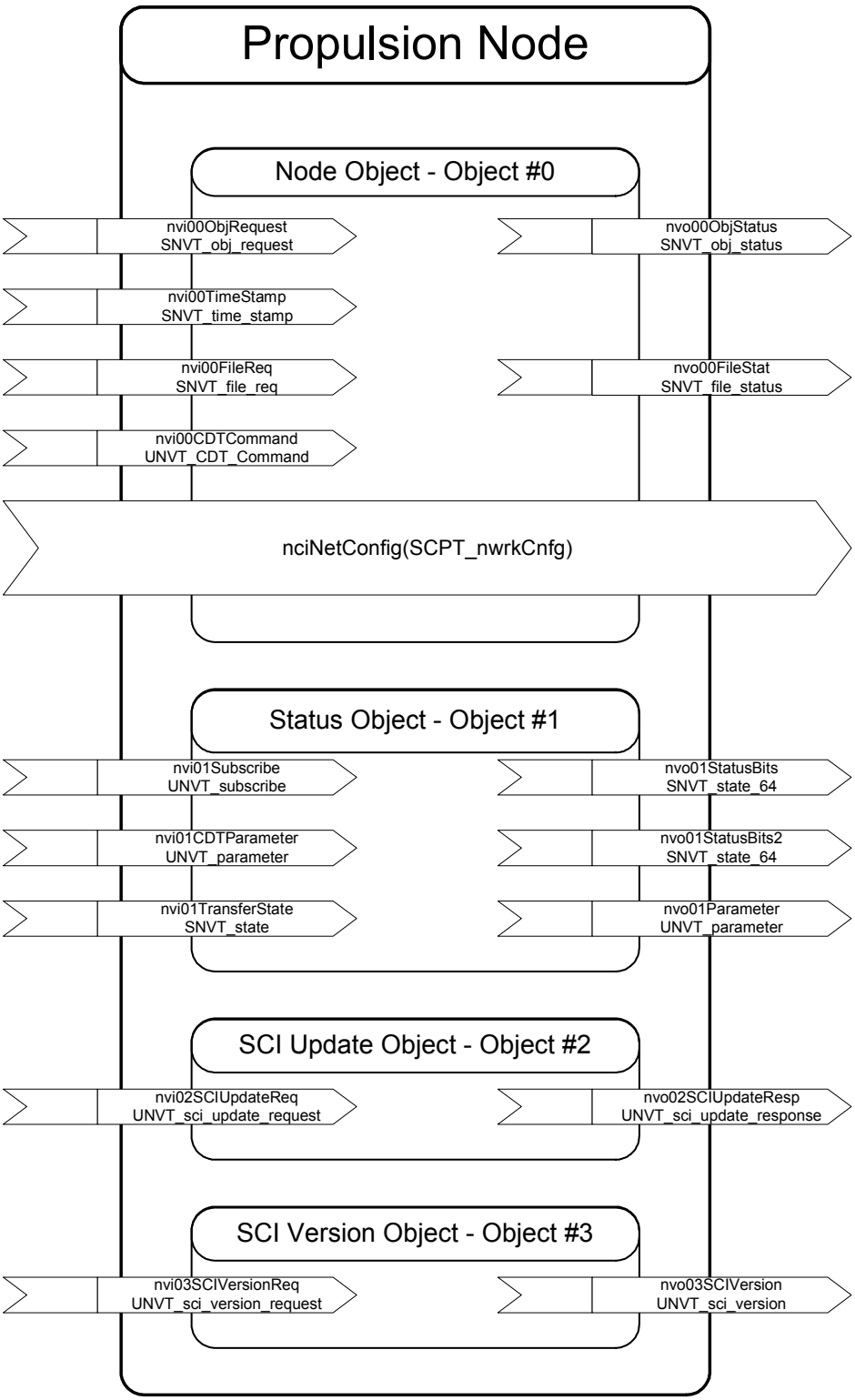

Figure 1: Propulsion Converter/Inverter Node

4.1 Node Object – Object #0

As standard LONWORKS network method, the follwoing datum is transfered between the Propulson Converter/Inverter system and the MDS.

4.1.1 nvi00ObjRequest

Declaration: network input sd_string("@0|1") SNVT_obj_request nvi00ObjRequest

Description: Mandatory variable defined in LonMark Functional Profile: Node Object, LonMark SNVT Master List. This input variable provides the mechanism to request a particular mode for the node as a whole.

4.1.1.1 Data Value

Data values are the same as SEPTA.

4.1.2 nvo00ObjStatus

Declaration: network output sd_string("@0|2") SNVT_obj_status nvo00ObjStatus

Description: Mandatory variable defined in LonMark Functional Profile: Node Object, LonMark SNVT Master List. This output variable reports the general status of the node.

Destination: MDS

4.1.2.1 Data Value

Data values are the same as SEPTA.

4.1.3 nvi00TimeStamp

Declaration: network input sd_string("@0|3") SNVT_time_stamp nvi00TimeStamp

Description: The Communications subsystem shall provide the current UTC time to all other subsystems .The MDS may also transmit this variable.

4.1.3.1 Data Value

Current time in UTC format.

4.1.4 nvi00FileReq

Declaration: network input sd_string("@0|4") SNVT_file_req nvi00FileReq

Description: Receives requests from the MDS used to control file transfer of a new software image or trace file transfer.
The Communications subsystem must distinguish between updates received from the two MDSs when operating in a married pair.

4.1.4.1 Data Value

Data values are the same as SEPTA.

4.1.5 nvo00FileStat

Declaration: network output sd_string("@0|5") SNVT_file_status nvo00FileStat

Description: Sends file transfer status to the MDS during transfer of data to wayside.
The Communications subsystem must send this variable using explicit NV addressing to a particular MDS in a married pair as a response to a file transfer request from that MDS.

Destination: MDS

4.1.5.1 Data Value

Data values are the same as SEPTA.

4.1.6 nci00NetConfig

Declaration: config network input sd_string("&0,,0\x90,25;") SCPTnwrkCnfg nci00NetConfig

Description: All nodes must support self-installation and provide a configuration property to allow a network tool to override the node's self-installation procedure. If the value of this variable is set to CFG_EXTERNAL when the node is reset or powers up, then the node shall not execute any of its self-installation functions.

4.1.6.1 Preset Value

This variable shall be initialized to CFG_LOCAL when Communications subsystem software is reloaded and when units are delivered from the factory.

4.1.7 Nvi00CDTCommand

Declaration: network input sd_string("@0|6") UNVT_CDT_command nvi00CDTCommand

Description: "Clear Trace File" is used by the MDS to clear all trace files.
"Initial Self Test" is used by the MDS to start Propulsion On-board testing.
See section 5.2.2 for the UNVT_CDT_command variable structioure.

4.1.7.1 Data Value

The following table defines the commands send by the MDS to the Propulsion subsystem.

Table 5: MDS Command

ID	MDS Command	Argument	Notes
2	Clear Trace File	0	Clear all trace files: History data, trace data and high speed trace data.
2	Initial Self Test	1	Start the on-board testing.

All other nvi00CDTCommand values shall be ignored.

4.2 Monitoring Object – Object #1

To exchange the digital signals and analog signals from/to the propulsion converter/inverter system or MDS, the following datum are transfered between the MDS and the propulsion converter/inverter system.

4.2.1 nvi01Subscribe

Declaration: network input sd_string("@1|1") UNVT_subscribe nvi01Subscribe

Description: Used by the MDS to set the required transmission rate for monitoring data sent to the MDS.

4.2.1.1 Data Value

Data values are the same as SEPTA.

4.2.2 nvo01StatusBits

Declaration: network output sd_string("@1|2") SNVT_state_64 nvo01StatusBits

Description: Current boolean subsystem status.

Destination: MDS

4.2.2.1 Data Value

The following table defines the status bit assignments.

Table 6: Status Data Sent to MDS (nvoStatusBits)

Index	Description *( ) means internal symbol	Values	Severity level (Note 1)	Notes
1	Forward command feedback (FWD*)	0 = OFF 1 = ON	0	Status information
2	Reverse command feedback (REV*)	0 = OFF 1 = ON	0	Status information
3	Powering operation mode (PFR&)	0 = OFF 1 = ON	0	Status information
4	Regenerative braking operation mode (RBOKM)	0 = OFF 1 = ON	0	Status information
5	Rheostatic braking operation mode (DBOKM)	0 = OFF 1 = ON	0	Status information
6	Test mode feedback (TEST&)	0 = OFF 1 = ON	0	Status information

Index	Description *( ) means internal symbol	Values	Severity level (Note 1)	Notes
7	CI cut out feedback (CICUT)	0 = OFF 1 = ON	0	Status information
8	Regenerative braking cut out feedback (RBCUTS)	0 = OFF 1 = ON	0	Status information
9	Dynamic braking available (CDR#)	0 = Not Available 1 = Available	0	Status information
10	K interlock signal (KINWM)	0 = Open 1 = Close	0	Status information
11	AK interlock signal (AKINWM)	0 = Open 1 = Close	0	Status information
12	Over voltage of catenary line (VSOVSM)	0 – Not detected 1 – Detected	1	Protection information
13	Low voltage of catenary line (VSLVSM)	0 – Not detected 1 – Detected	1	Protection information
14	Over curretnt of Secondary current1 (ISOC1SM)	0 – Not detected 1 – Detected	1	Protection information
15	Over curretnt of Secondary current2 (ISOC2SM)	0 – Not detected 1 – Detected	3	Protection information
16	Freauency Irregular of Primary Circuit (FIRSM)	0 – Not detected 1 – Detected	1	Protection information
17	Waveform irregular of primary voltage(VSDDSM)	0 – Not detected 1 – Detected	1	Protection information
18	Ground Fault Detection1 (GD1SM)	0 – Not detected 1 – Detected	1	Protection information
19	Ground Fault Detection2 (GD2SM)	0 – Not detected 1 – Detected	3	Protection information
20	Over Voltage of DC Circuit1 (VDOV1SM)	0 – Not detected 1 – Detected	1	Protection information
21	Over Voltage of DC Circuit2 (VDOV2SM)	0 – Not detected 1 – Detected	1	Protection information
22	Over Voltage of DC Circuit3 (VDOV3SM)	0 – Not detected 1 – Detected	2	Protection information
23	Low voltage of Battery power source (P38LVSM)	0 – Not detected 1 – Detected	2	Protection information
24	Low voltage of DC100V power source (P100LVSM)	0 – Not detected 1 – Detected	2	Protection information

Index	Description *( ) means internal symbol	Values	Severity level (Note 1)	Notes
25	Low voltage of Control power source (CPLVSM)	0 – Not detected 1 – Detected	2	Protection information
26	Low voltage of Power supply for Gate Interface (GPLVSM)	0 – Not detected 1 – Detected	2	Protection information
27	CPU Fault (WDTSM)	0 – Not detected 1 – Detected	2	Protection information
28	Over current of Traction Motor1 (MMOC1SM)	0 – Not detected 1 – Detected	1	Protection information
29	Over current of Traction Motor2 (MMOC2SM)	0 – Not detected 1 – Detected	2	Protection information
30	Phase Unblance of Traction Motor (PUDSM)	0 – Not detected 1 – Detected	2	Protection information
31	Over Temperature of Converter power unit (THDCM)	0 – Not detected 1 – Detected	2	Protection information
32	Over Temperature of Inverter power unit (THDIM)	0 – Not detected 1 – Detected	2	Protection information
33	Over Temperature of Brake chopper power unit (THDBM)	0 – Not detected 1 – Detected	2	Protection information
34	Charging circuit Fault (FCDSM)	0 – Not detected 1 – Detected	2	Protection information
35	Blower Motor Fault (BMFS)	0 – Not detected 1 – Detected	2	Protection information
36	Brake Chopper Fault (BCHFM)	0 – Not detected 1 – Detected	2	Protection information
37	Overheat of Brake Resistor (OHBRM)	0 – Not detected 1 – Detected	2	Protection information
38	Wheel slip/slide detected (WSDM)	0 – Not detected 1 – Detected	1	Protection information
39	CIF connector disconnected (CIFER)	0 – Not detected 1 – Detected	1	Protection information
40	Mulfunction of powering (MFD)	0 – Not detected 1 – Detected	1	Protection information
41	Backward Speed Detection (BSDM)	0 – Not detected 1 – Detected	2	Protection information

	Index	Description *( ) means internal symbol	Values	Severity level (Note 1)	Notes
A	**42**	**K Fault Detected 1 (KFDM)**	0 – Not detected 1 – Detected	2	Protection information
A	**43**	**AK Fault Detected 1 (AKFDM)**	0 – Not detected 1 – Detected	2	Protection information
A	**44**	**Spare**			
	45	Other CI fault signal (TOCR*)	0 – Other CI not fault 1 – Other CI falut	0	Status information
	46	Master bypass switch interlock signal (MBS*)	0 - OFF 1 - ON	0	Status information
	47	Occurence of slight degree of protection (OPR#)	0 - OFF 1 - ON	2	Protection information
	48	Occurence of critical degree of protection (OCR#)	0 - OFF 1 - ON	3	Protection information
	49	Invalid command signal detected (IVCMDM)	0 – Not detected 1 – Detected	2	Protection information
	50	ACCT fault detection (CTA_ERR)	0 – Not detected 1 – Detected	1	Protection information
	51	Slide detected for Bogie A (SLDB1M#)	0 – Not detected 1 – Detected	0	Status information
	52	Slide detected for Bogie B (SLDB2M#)	0 – Not detected 1 – Detected	0	Status information
A	**53**	**Spare**			
	54	CI is installed in the Married Pair-A Car (MCAR_A&)	0 – Not installed 1 – Installed	0	Status information
	55	CI is installed in the Married Pair-B Car (MCAR_B&)	0 – Not installed 1 – Installed	0	Status information
	56–63	Counter	0 – 255	N/A	Incremented on transmission, wraps around from 255 to 0.

Note 1: LEVEL0 indicates status information only. No failure detected
From Melco documentation:
LEVEL1 means the faults which are produced by the disturbance factors and cause to the Propulsion fault. In this case Converter, inverter and Brake chopper are stopped, but K and VCB are not tripped.
LEVEL2 means slight degree fault of Propulsion converter/inverter, which is called as “OPR”. K is tripped when OPR protection is detected.
LEVEL3 means heavy fault of Propulsion converter/inverter, which is called as “OCR”. VCB is tripped when OCR protection is detected.

4.2.3 nvo01StatusBits2

Declaration: network output sd_string("@1|3") SNVT_state_64 nvo01StatusBits2

Description: Current boolean subsystem status.

Destination: MDS

4.2.3.1 Data Value

The following table defines the status bit assignments.

Table 7: Status Data Sent to MDS (nvoStatusBits2)

Index	Description *( ) means internal symbol	Values	Severity level (Note 1)	Notes
1	CTU fault detection (CTU_ERR)	0 – Not detected 1 – Detected	1	Protection information
2	CTV fault detection (CTV_ERR)	0 – Not detected 1 – Detected	1	Protection information
3	BCT1 fault detection (CTB1_ERR)	0 – Not detected 1 – Detected	1	Protection information
4	BCT2 fault detection (CTB2_ERR)	0 – Not detected 1 – Detected	1	Protection information
5	DCPT1 fault detection (DPT1_ERR)	0 – Not detected 1 – Detected	1	Protection information
6	DCPT2 fault detection (DPT2_ERR)	0 – Not detected 1 – Detected	1	Protection information
7	**Spare**			
8	ROM fault (ROERRL&)	0 – Not detected 1 – Detected	1	Protection information
9	RAM fault (RAERRL&)	0 – Not detected 1 – Detected	1	Protection information
10	Communication error with FBCU (TRV1M)	0 – Not error 1 – Error	1	Protection information
11	Low Voltage of DC Circuit1 (VDLV1SM)	0 – Not detected 1 – Detected	1	Protection information
12	Low Voltage of DC Circuit2 (VDLV2SM)	0 – Not detected 1 – Detected	2	Protection information
13	IGBT Self Protection (IGBTFDSM)	0 – Not detected 1 – Detected	3	Protection information

Index	Description *( ) means internal symbol	Values	Severity level (Note 1)	Notes
14	Fault of Pulse Generator (PGDM)	0 – Not detected 1 – Detected	2	Protection information
15	Main Transformer failure (MTRFM)	0 – Not detected 1 – Detected	2	Protection information
16	APS fault detected (APSFDM)	0 – Not detected 1 – Detected	1	Protection information
17	Pulse mode of Inverter Asynchronous mode (ASFLG)	0 – OFF 1 – ON	0	Status information
18	Rest sginal (RSR)	0 – OFF 1 – ON	0	Status information
19	Pulse mode of Inverter 3 pulse (_3PFLG)	0 – OFF 1 – ON	0	Status information
20	Pulse mode of Inverter 1 pulse (_1PFLG)	0 – OFF 1 – ON	0	Status information
21	Converter Gate start signal (GSTC*)	0 – Gate off 1 – Gate start	0	Status information
22	Inverter Gate start signal (GSTI*)	0 – Gate off 1 – Gate start	0	Status information
23	Brake chopper Gate start signal (BGSTF*)	0 – Gate off 1 – Gate start	0	Status information
24	Failure history data existing	0 – Not existing 1 – Existing	0	Status information
25	Normal speed trace data Existing1	0 – Not existing 1 – Existing	0	Status information
26	Normal speed trace data Existing2	0 – Not existing 1 – Existing	0	Status information
27	Normal speed trace data Existing3	0 – Not existing 1 – Existing	0	Status information
28	Normal speed trace data Existing4	0 – Not existing 1 – Existing	0	Status information
29	Normal speed trace data Existing5	0 – Not existing 1 – Existing	0	Status information
30	Normal speed trace data Existing6	0 – Not existing 1 – Existing	0	Status information
31	Normal speed trace data Existing7	0 – Not existing 1 – Existing	0	Status information

Index	Description *( ) means internal symbol	Values	Severity level (Note 1)	Notes
32	Normal speed trace data Existing8	0 – Not existing 1 – Existing	0	Status information
33	Normal speed trace data Existing9	0 – Not existing 1 – Existing	0	Status information
34	Low voltage of control power source detection at power on self test (PSERRL&)	0 – Not detected 1 – Detected	2	Protection information
35	IGBT Fault detection at power on self test (FOERRL&)	0 – Not detected 1 – Detected	3	Protection information
36	Filter capacitance failure detection (FCCAPERM)	0 – Not detected 1 – Detected	2	Protection information
37	SWITCH command feedback (SWITCH*)	0 = OFF 1 = ON	0	Status information
38	P1 command feedback (P2*)	0 = OFF 1 = ON	0	Status information
39	P2 command feedback (P3*)	0 = OFF 1 = ON	0	Status information
40	P3 command feedback (P4*)	0 = OFF 1 = ON	0	Status information
41	Emergency braking command feedback (EM*)	0 = OFF 1 = ON	0	Status information
42	VCB interlock signal (VCBON*)	0 = OFF 1 = ON	0	Status information
43	**Heater contactor status A(THKSM)**	**0 – Not closed 1 – Closed**	**0**	**Status information**
44	**Holding Brake ~~status~~ Arequest A(HBRSM)**	**0 – ~~Not applied~~ ANot required 1 – ~~Applied~~ ARequired**	**0**	**Status information**
45	**High Acceleration signal A(HARM)**	**0 = OFF 1 = ON**	**0**	**Status information**
46	High speed trace data Existing1	0 – Not existing 1 – Existing	0	Status information
47	High speed trace data Existing2	0 – Not existing 1 – Existing	0	Status information
48	High speed trace data Existing3	0 – Not existing 1 – Existing	0	Status information
49	High speed trace data Existing4	0 – Not existing 1 – Existing	0	Status information
50	High speed trace data Existing5	0 – Not existing 1 – Existing	0	Status information
51	High speed trace data Existing6	0 – Not existing 1 – Existing	0	Status information

	Index	Description *( ) means internal symbol	Values	Severity level (Note 1)	Notes
	52	High speed trace data Existing7	0 – Not existing 1 – Existing	0	Status information
B	**53**	**K Fault Detected 2 (KFD2M)**	**0 – Not detected 1 – Detected**	**3**	**Protection information**
B	54	On-demand Test result existing	0 – Not existing 1 – Existing	0	Status information
A	**55**	**AK Fault Detected 2 (AKFD2M)**	**0 – Not detected 1 – Detected**	**3**	**Protection information**
	56–63	Counter	0 – 255	N/A	Incremented on transmission, wraps around from 255 to 0.

Note 1: LEVEL0 indicates status information only. No failure detected
From Melco documentation:
LEVEL1 means the faults which are produced by the disturbance factors and cause to the Propulsion fault. In this case Converter, inverter and Brake chopper are stopped, but K and VCB are not tripped.
LEVEL2 means slight degree fault of Propulsion converter/inverter, which is called as “OPR”. K is tripped when OPR protection is detected.
LEVEL3 means heavy fault of Propulsion converter/inverter, which is called as “OCR”. VCB is tripped when OCR protection is detected.

4.2.4 nvo01Parameter

Declaration: network output sd_string("@1|4") UNVT_parameter nvo01Parameter

Description: Current numeric parameter value.

Destination: MDS

4.2.4.1 Data Value

The following table defines the numeric parameter ID assignments.

Table 8: Parametric Data Sent to MDS

ID	Description	Units or scale/offset	Available Update Rate (Note 1)	Transmission Rate (Note 2)	Notes	Resolution
1	Filter capacitor voltage (upper)	Vdc	500ms	2 sec	Max:2500V Min:0V	2500V/FFH
2	Filter capacitor voltage (lower)	Vdc	500ms	2 sec	Max:2500V Min:0V	2500V/FFH

ID	Description	Units or scale/offset	Available Update Rate (Note 1)	Transmission Rate (Note 2)	Notes	Resolution
3	Catenary line voltage	kVrms	500ms	2 sec	Max:50kV Min:0V This signal is RMS value.	50kV/FFH
4	Traction motor current	Arms	500ms	2 sec	Max:2500A Min:0V This signal is RMS value.	2500A/FFH
5	Secondary current	Arms	500ms	2 sec	Max:3000A Min:0V This signal is RMS value.	3000A/FFH
6	Brake chopper current	Adc	500ms	2 sec	Max:2000A Min:0V	2000A/FFH
7	Torque pattern	Nm	500ms	2 sec	Max:3000Nm Min:0V	3000Nm/FFH
8	Powering torque achieved	Nm	500ms	2 sec	Max:3000Nm Min:0V	3000Nm/FFH
9	Braking torque achieved	Nm	500ms	2 sec	Max:3000Nm Min:0V	3000Nm/FFH
10	Inverter modulation ratio	%	500ms	2 sec	Max:100% Min:0%	100%/FFH
11	Inverter Slip frequency	Hz	500ms	2 sec	Max:10Hz Min:0Hz	10Hz/FFH
12	Inverter frequency	Hz	500ms	2 sec	Max:256Hz Min:0Hz	256Hz/FFH
13	Rotor frequency	Hz	500ms	2 sec	Max:256Hz Min:0Hz	256Hz/FFH
14	Requested dynamic brake effort	kN	500ms	2 sec	Max:150kN Min:0kN	150kN/FFH
15	Frequency of catenary line	Hz	500ms	2 sec	Max:100Hz Min:0Hz	100Hz/FFH
16	Load Weight	%	500ms	2 sec	Max:100% Min:0%	100%/FFH
17	Temperature of MTr	deg.F	500ms	2 sec	Max:302deg.F Min:-58deg.F	392deg.F/FFH
18	Primary current	Arms	500ms	2 sec	Max:200A Min:0A	200A/FFH

Note 1: Typical time interval to observe a change.

Note 2: Transmission rate set by MDS subscription.

4.2.5 nvi01CDTParameter

Declaration: network output sd_string("@1|5") UNVT_parameter nvi01CDTParameter

Description: Current numeric parameter value.

4.2.5.1 Data Value

The following table defines the numeric parameter ID assignments.

Table 9: Parametric Data Required from MDS

ID	Description	Units or scale/offset	Transmission Rate (Note 1)	Notes	Resolution
1	Car speed	mph	2 sec		(NOTE 2)
2	Ambient temperature: Fresh air (Exterior)	Degree F	30 sec		(NOTE 2)
3	**Main Transformer Temperature**	**Degree F**	**2 sec**		
B **4**	**Primary circuit current**	**Arms**	**2 sec**	**This signal is RMS value.**	
B **B 5**	**Train Configuration**	**—**	**2 sec**	**(NOTE 3)**	**(NOTE 3)**
B 6	**C/I position**	**—**	**2 sec**	**(NOTE 3)**	**(NOTE 3)**
~~TBD~~E**7**	~~Spare5~~E**Other C/I fault condition**	~~TBD~~E**—**	~~TBD~~E**2 sec**	E**(NOTE 3)**	E**(NOTE 3)**
TBD	Spare6	TBD	TBD		
TBD	Spare7	TBD	TBD		

Note 1: Maximum transmission rate set by MDS supplier. Subject to change based availability and further interface discussions between MDS supplier and other subsystem suppliers. Source subsystems to be identified.

Note 2: Resolution of parametric data from MDS shall be defined by MDS supplier.

Note 3: These parameters are used for C/I phase shift control to reduce the harmonic currents. The details are shown below. (See HCN-L6340-2)

~~ID3~~BID5: 2 bits are required.

Bit2 to Bit15	Bit1	Bit0	Meaning
Don't Care	0	0	The train is composed of 2 cars (1 set of married pair).
Don't Care	0	1	The train is composed of 4 cars (2 sets of married pair).
Don't Care	1	0	The train is composed of 6 cars (3 sets of married pair).
Don't Care	1	1	The train is composed of 8 cars (4 sets of married pair).

~~ID4~~BID6: 8 bits are required and corresponding bit for C/I's position shall be "1" and other bits shall be "0" to indicate the position. The following table shows an example when the C/I is installed in No.2 car.

	Bit8 to Bit15	Bit7 (No.8 Car)	Bit6 (No.7 Car)	Bit5 (No.6 Car)	Bit4 (No.5 Car)	Bit3 (No.4 Car)	Bit2 (No.3 Car)	Bit1 (No.2 Car)	Bit0 (No.1 Car)
Position of C/I	Don't Care	0	0	0	0	0	0	1	0

("1": ~~C/I is installed in the car.~~BCorresponding bit for C/I's position
"0": ~~C/I is NOT installed in the car.~~BOther than "1")

~~B (Deleted)~~ **EID7: 8 bits are required and corresponding bit for faulty C/I shall be "1" and bits for healthy C/I shall be "0". When the car is not connected to the train, the corresponding bit such as Bit5 in 2 cars train shall be "1". The following table shows an example when the C/I in No.2 and No.3 cars are cutout in 8 cars train.**

	Bit8 to Bit15	Bit7 (No.8 Car)	Bit6 (No.7 Car)	Bit5 (No.6 Car)	Bit4 (No.5 Car)	Bit3 (No.4 Car)	Bit2 (No.3 Car)	Bit1 (No.2 Car)	Bit0 (No.1 Car)
C/I fault condition	Don't Care	0	0	0	0	0	1	1	0

("1": C/I in the car is cutout or the car is NOT existence.

"0": C/I in the car is NOT cutout.)

4.2.6 nvi01TransferState

Declaration: network input sd_string("@1|6") SNVT_state nvi01TransferState

Description: Used by MDS to suspend network traffic during file transfer operations.

4.2.6.1 Data Value

Data values are the same as SEPTA.

4.3 SCI Update Object – Object #2

To update the software of each SCI, the following datum are transfered between the MDS and the Propulsion Converter/Inverter system. In addition, to conducted the Propulsion On-board testing on the car, the information file for the On board testing is transfered between the MDS and the Propulsion Converter/Inverter system.

4.3.1 nvi02SCIUpdateReq

Declaration: network input sd_string("@2|1") UNVT_sci_update_request nvi02SCIUpdateReq

Description: Used by MDS to request SCI update.

4.3.1.1 Data Value

The following tables define the request values and the index number assignment. These values are the same as SEPTA.

Table 10: SCI Update Request Value

Request Value	Request definition
0	Invalid
1	Initiate – The MDS requests the subsystem to Prepare for SCI update.
2	Install – The MDS has completed SCI image file transfer and commands the subsystem to install the update.
3	Install and Reboot – The MDS has completed SCI image file transfer and commands the subsystem to install the update. The system requires reboot when the install is complete.
4 - 255	Invalid

Table 11: SCI Index Number Assignment

Index	SCI name	Sector	File name	UPDATE FROM MDS?	INOTES
260	SYS	Sec 00	SYS000.PRP	Yes	
261	SYS	Sec 01	SYS001.PRP	Yes	
262	SYS	Sec 02	SYS002.PRP	Yes	
263	SYS	Sec 03	SYS003.PRP	Yes	
264	SYS	Sec 04	SYS004.PRP	Yes	
265	SYS	Sec 05	SYS005.PRP	Yes	
266	SYS	Sec 06	SYS006.PRP	Yes	
267	SYS	Sec 07	SYS007.PRP	Yes	
268	SYS	Sec 08	SYS008.PRP	Yes	
269	SYS	Sec 24	SYS024.PRP	Yes	
270	SYS	Sec 25	SYS025.PRP	Yes	
271	SYS	Sec 26	SYS026.PRP	Yes	For Parameter change
280	IVF	Sec 00	IVF000.PRP	Yes	
281	IVF	Sec 01	IVF001.PRP	Yes	
282	IVF	Sec 02	IVF002.PRP	Yes	
283	IVF	Sec 03	IVF003.PRP	Yes	
284	IVF	Sec 04	IVF004.PRP	Yes	
285	IVF	Sec 05	IVF005.PRP	Yes	
286	IVF	Sec 06	IVF006.PRP	Yes	
290	CVF	Sec 00	CVF000.PRP	Yes	
291	CVF	Sec 01	CVF001.PRP	Yes	
292	CVF	Sec 02	CVF002.PRP	Yes	
293	CVF	Sec 03	CVF003.PRP	Yes	
294	CVF	Sec 04	CVF004.PRP	Yes	
295	CVF	Sec 05	CVF005.PRP	Yes	
296	TST	Sec 00	TST000.PRP	Yes	For On-board testing

4.3.2 nvo02SCIUpdateResp

Declaration: network output sd_string("@2|2") UNVT_sci_update_response nvo02SCIUpdateResp

Description: Used by the propulsion C/I to respond to MDS update requests.

Destination: MDS

4.3.2.1 Data Value

Data values are the same as SEPTA.

Table 12: Definition of SCI Update Reason Values

REASON VALUE	REASON DEFINITION
0	Invalid.
1	Insufficient memory.
2	CRC check failure
3	Active faults
4	Vehicle in motion
5	Incompatible version
6	Contactors (K, AK) are not closed.
7	VCB is opened.
8	There is DC link voltage.
9	There is Catenary voltage.
10	Direction command is activated.
11	Powering command is activated.
12	Braking command is activated.
13	RBCUT switch is activated.
14	I/O failure
7-255	Invalid.

4.3.3 SCI Update File Transfer Details

The SCIs identified by MELCO for update from via the MDS are composed of multiple parts identified as sectors. The update of a single SCI requires the transfer of multiple files from the PTU to the propulsion unit. The MELCO will provide a single image information file for the SCI update and multiple sector files for transfer from the PTU. The image information file format is described in the following section to accommodate the propulsion SCI update. In addition, information file for the On-board test is described in the following section.

4.3.3.1 Propulsion Specific Image Information File

The propulsion image information file is multiple lines, the first line in the file provides information for the SCI as a whole and the remaining lines provide information for each file included in the transfer.

SCI version, Image checkvalue and Image size shall **NOT** be used for file transfer.

```
Subsystem name,SCI Index,SCI name,SCI version,Image checkvalue,Image size,Reboot?
File Index, File Name, File checkvalue, File Size
File Index, File Name, File checkvalue, File Size
File Index, File Name, File checkvalue, File Size
File Index, File Name, File checkvalue, File Size
…
```

File checkvalue and File size shall be used for file transfer.

Where:

- Subsystem name: PROP
- SCI Index: Index for the particular SCI (According to Table.10)
- SCI name: Up to 8 alphanumeric characters (SYS or IVF or CVF or SYS26 or TST)
- SCI version: SCI version equals to total sum value, so the total sum value will be written here. (Not use)
- Image checkvalue: The total sum value will be written here. (Not use)
- Image size: Sum file size of each sector will be written here. (Not use)
- Reboot? Always set to "Y" for PROP
- File Index: Integer file number (According to Table.11)
- File Name: File name will be written here according to Table.8.
- File checkvalue: File sum value of each sector will be written here.
- File size: File length in bytes defined as a Hex value

Note1: The File size values are used by the MDS to update the progress bar displayed to the operator and so should always be specified.

Note2: The Image check value and Image size may be left blank if the File check values and sizes are sufficient to verify that the image was sent without error.

Note3: The MDS uses the File size values to update the progress bar displayed to the operator and so should always be specified.

The format of an inf.file is shown in follows. During software upload the required software and the corresponding .inf file will be passed on to the MDS. The MDS then sends the software as sectors to the GCU in the prescribed sequential manner.

In case of the use of Sector 26, which is used to modify only a certain section of the SYS the required .inf file will be forwarded to the MDS similar to the other 3 different software to be uploaded, however the only difference in this case is that there will be only one sector. However regular software Upload of the SYS will still constitute of 25 sectors. The additional file is part of the SYS software but needs to be uploaded separately due to the structure and requirements of the S/W.

In addition, the inf.file for On-board testing shall be used. This information file shall be produced in a certain destination in the PTU laptop when the PTU software for the Propulsion system are installed. The information file for On-board testing shall NOT be changed contrary to other information file for SCI update, however the inf.file for On-board testing can be transferred as samae as SCI updating information file.

- Example file 1: In case of updating SYS SCI except for Sector.26, Name of inf.file: "SYS.inf"

```
PROP,1,SYS,xxxxxxxx,xxxxxxxx,yyyyyyyy, Y<CR><LF>
260, SYS000.PRP, zzzzzzzz, aaaaaaaa
261, SYS001.PRP, zzzzzzzz, aaaaaaaa
262, SYS002.PRP, zzzzzzzz, aaaaaaaa
263, SYS003.PRP, zzzzzzzz, aaaaaaaa
264, SYS004.PRP, zzzzzzzz, aaaaaaaa
265, SYS005.PRP, zzzzzzzz, aaaaaaaa
266, SYS006.PRP, zzzzzzzz, aaaaaaaa
267, SYS007.PRP, zzzzzzzz, aaaaaaaa
268, SYS008.PRP, zzzzzzzz, aaaaaaaa
269, SYS024.PRP, zzzzzzzz, aaaaaaaa
270, SYS025.PRP, zzzzzzzz, aaaaaaaa
```

- Example file 2: In case of updating SYS SCI,Sector.26 only, Name of inf.file: "SYS26.inf"

```
PROP,5,SYS26,xxxxxxxx,xxxxxxxx,yyyyyyyy, Y<CR><LF>
271, SYS026.PRP, zzzzzzzz, aaaaaaaa
```

- Example file 3: In case of updating CVF SCI, Name of inf.file: "CVF.inf"

```
PROP,3,CVF,xxxxxxxx,xxxxxxxx,yyyyyyyy, Y<CR><LF>
290, CVF000.PRP, zzzzzzzz, aaaaaaaa
291, CVF001.PRP, zzzzzzzz, aaaaaaaa
292, CVF002.PRP, zzzzzzzz, aaaaaaaa
293, CVF003.PRP, zzzzzzzz, aaaaaaaa
294, CVF004.PRP, zzzzzzzz, aaaaaaaa
295, CVF005.PRP, zzzzzzzz, aaaaaaaa
```

- Example file 4: In case of updating IVF SCI, Name of inf.file: "IVF.inf"

```
PROP,2,IVF,xxxxxxxx,xxxxxxxx,yyyyyyyy, Y<CR><LF>
280, IVF000.PRP, zzzzzzzz, aaaaaaaa
281, IVF001.PRP, zzzzzzzz, aaaaaaaa
282, IVF002.PRP, zzzzzzzz, aaaaaaaa
283, IVF003.PRP, zzzzzzzz, aaaaaaaa
284, IVF004.PRP, zzzzzzzz, aaaaaaaa
285, IVF005.PRP, zzzzzzzz, aaaaaaaa
286, IVF006.PRP, zzzzzzzz, aaaaaaaa
```

- Example file 5: In case of conducting the on-board test, Name of inf.file: "TST.inf"

```
PROP,6,TST,xxxxxxxx,xxxxxxxx,yyyyyyyy, Y<CR><LF>
296, TST000.PRP, zzzzzzzz, aaaaaaaa
```

4.3.3.2 Propulsion Specific SCI Update File Transfer Protocol

Figure 2 shows the sequence of signals between the MDS and Propulsion converter/inverter on the car monitoring network for SCI updates. The Propulsion specific SCI update differs from the general SCI update transfer in sending multiple files (sectors) for each SCI update instead of a single file.

The control of individual sector file transfers uses the SCIUpdateReq and SCIUpdateResp network variables. The MDS signals the Propulsion converter/inverter for an SCI update by sending SCIUpdateReq with request value = 1 and Image information catalogued in the .inf file described in section 4.3.3.1. The Propulsion converter/inverter responds to indicate acceptance of the SCI update. The MDS sends a sector file to the Propulsion converter/inverter with the file indices identified in Table.11 and the LonWorks standard file transfer protocol.

After both the MDS and Propulsion converter/inverter signal end of file and acknowledge the FR_CLOSE_FILE signal, the MDS signals the Propulsion converter/inverter to install the sector file by sending SCIUpdateReq with request value = 2 and the sector checkvalue. The MDS will wait at least 10 seconds for the Propulsion converter/inverter to install the sector file and respond with SCIUpdateResp. If the Propulsion converter/inverter does not respond or indicates a failure, the MDS will abort the SCI udpate.

On successful sector installation, the MDS will send the next sector file. If all sector files are successfully installed by the Propulsion converter/inverter, then the MDS send SCIUpdateReq with request value = 3 and the Propulsion converter/inverter complete installation and reboot of the SCI.

Note:	The MDS does not perform retries on transfer failures. If the MDS times out waiting for a response, or receives an SCIUpdateResp indicating that the initiation or installation was refused, then it will immediately abort the SCI update.

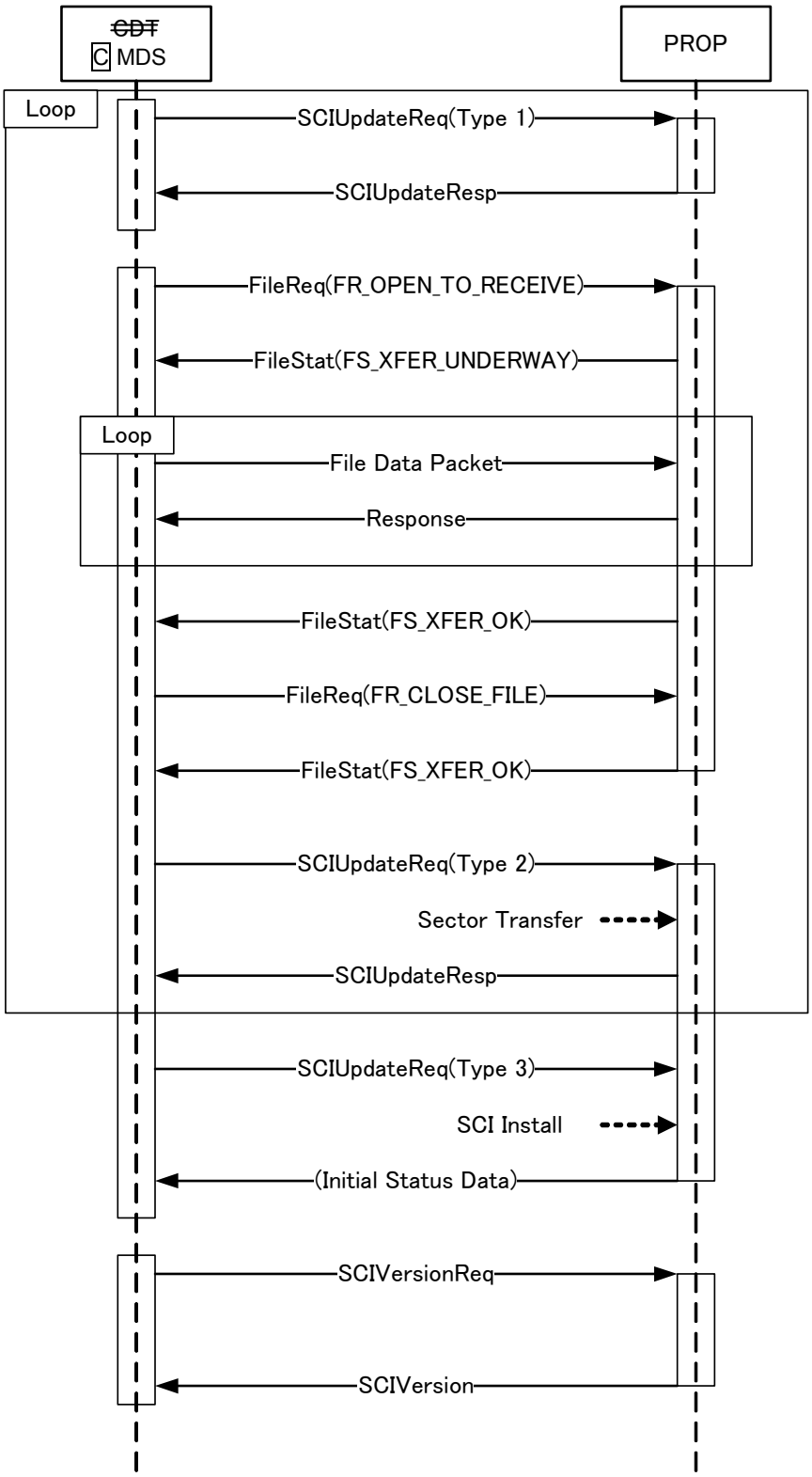

Figure 2: Propulsion SCI Update Protocol

The values in the SCIUpdateReq network variable are set as follows:

For request = 1 and 3:

- sci_index = SCI Index
- sci_name = SCI name
- sci_ver = SCI version (=File checkvalue)
- checkvalue = File checkvalue
- filesize = File size

For request = 2:

- sci_index = File index
- sci_name = Unused (set to all zeroes)
- sci_ver = Unused (set to all zeroes)
- checkvalue = File checkvalue
- filesize = File size

4.4 SCI Version Object – Object #3

To check the software version of each SCI, the following datum are transfered between the MDS and the propulsion converter/inverter system.

The Version Check requirements for Sector 26 are added so as to verify the version of the S/W that is uploaded. In addtion, Sector 26 is separated from the other Sectors as this sector will vary . The first 25 sectors make the core of the S/W and are not changed under normal operating conditions however sector 26 can be altered.

4.4.1 nvo03SCIReq

Declaration: network input sd_string("@3|1") UNVT_sci_version_request nvi03SCIVersionReq

Description: Used by MDS to request SCI version information. SCI identified by index number.

4.4.1.1 Data Value

The following table defines the SCI index number assignments.

Table 13: SCI Index Number Assignment

SCI INDEX	SCI NAME	UPDATE FROM MDS?
1	Sequence control, torque command and monitoring processing except for Secor.26 (SYS)	Yes
2	Converter command control (CVF)	Yes
3	Inverter command control (IVF)	Yes
4	LON-WORKS communication (LON)	No
5	Parameter change area from PTU, only Secor.26 in SYS (SYS26)	Yes
6	On board testing	Yes

4.4.2 nvo03SCIVersion

Declaration: network output sd_string("@3|2") UNVT_sci_version nvo03SCIVersion

Description: Populated by subsystem with requested SCI version information.

Destination: MDS

4.4.2.1 Data Value

Table 14: SCI Information

SCI INDEX	SCI NAME	SCI TYPE (NOTE1)	SCI NAME (8CHAR)
1	Sequence control, torque command and monitoring processing except for Secor.26 (SYS)	1	SYS
2	Converter command control (CVF)	1	CVF
3	Inverter command control (IVF)	1	IVF
4	LON-WORKS communication (LON)	3	LON
5	Parameter change area from PTU, only Secor.26 in SYS (SYS26)	1	SYS26
6	On board testing	1	TST

NOTE: 1: Software. SCI can be update via the network form the MDS
2: Firm ware. SCI requres subsystem specific operation to update. This may include physical component replacement or direct physical accsess to the subsystem.
3: Neuron.Neuron based SCI. Requires update through the standard functionality provided by the LonTalk protocol management functions.
4: Opratin System. Version informatin provide for reference purposes only.
5: Bootloader. Version informatin provide for reference purposes only.
6: SCI does not exit. Indicates MDS requested version informaiton using an invalide SCI index.

5. Network Interface

5.1 General

The Propulsion Converter/Inverter complies with the general monitoring.

5.2 Subsystem Specific Network Interface Declarations

Declarations in this section use Neuron C conventions, i.e. 'short' is an 8-bit value, 'long' is 16-bits and 'quad' is 32-bits.

5.2.1 UNVT_CDT_command

UNVT_CDT_command structure declaration:

```
UNVT_CDT_command
    typedef struct {
        unsigned short      command_id;
        unsigned long       command_arg;
    } UNVT_CDT_command;
```

Field descriptions:

- command_id: Identifies the command that is being sent; its valid range is 1 to 255. A value of 0 shall not be used.
- command_arg: Optional argument to the command. It shall be set to 0 if the argument is unused.

5.3 Software Update

After software updating and checking the software sum value, the battery voltage (DC37.5V) should be turned off and on by using no fuse breaker (CICN) installed in the battery voltage input side on the car body side.

5.4 File Transfers

File data transfered from the propulsion converter/inverter is described in the following tabel.

Table 15: File Transfers

Index	File Type	Sender	Receiver	Initiator	Notes
260 to 271	SYS SCI Update	MDS	PROP	MDS	
280 to 286	IVF SCI Update	MDS	PROP	MDS	
290 to 295	CVF SCI Update	MDS	PROP	MDS	
D ~~296~~	~~On board test conducting~~	~~MDS~~	~~PROP~~	~~MDS~~	~~For on board testing from the car~~
311	Failure history data	PROP	MDS	MDS	1) Sampling time: None (This data is instant data as Protection detected.) 2) Recording number: 256data 3) Trace data size per 1datum: 32byte: 4) Trace data size per 256data: 8,192byte 5) Contents of Failure history data: TBD (All digital signals)
312	Normal speed trace data 1	PROP	MDS	MDS	1) Sampling time: 1msec 2) Recording number: 9 data 3) Trace time: -700ms/0ms/300ms, Total: 1sec 4) Trace data size per 1datum: 54061byte 5) Trace data size per 9data: 486549byte 6) Contents of Normal speed data: TBD (Digital signal:12byte,Analog signal:42byte per 1datum)
313	Normal speed trace data 2	PROP	MDS	MDS	
314	Normal speed trace data 3	PROP	MDS	MDS	
315	Normal speed trace data 4	PROP	MDS	MDS	
316	Normal speed trace data 5	PROP	MDS	MDS	
317	Normal speed trace data 6	PROP	MDS	MDS	
318	Normal speed trace data 7	PROP	MDS	MDS	
319	Normal speed trace data 8	PROP	MDS	MDS	
320	Normal speed trace data 9	PROP	MDS	MDS	
321	High speed trace data 1	PROP	MDS	MDS	1) Sampling time: 20us 2) Recording number: 7 data 3) Trace time: -122.88ms/0ms/40.96ms, Total: 163.84msec 4) Trace data size per 1datum: 262144byte 5) Trace data size per 7data: 1835008byte 6) Contents of Speed speed data: TBD
322	High speed trace data 2	PROP	MDS	MDS	

Index	File Type	Sender	Receiver	Initiator	Notes
323	High speed trace data 3	PROP	MDS	MDS	
324	High speed trace data 4	PROP	MDS	MDS	
325	High speed trace data 5	PROP	MDS	MDS	
326	High speed trace data 6	PROP	MDS	MDS	
327	High speed trace data 7	PROP	MDS	MDS	
328	On board test result data	PROP	MDS	MDS	For on board testing from the car

5.4.1 Log File Transfer Details

The Propulsion subsystem indicates trace files are available for download to the PTU by setting the appropriate nvo01StatusBits2 to one (1). Refer to section 4.2.3 for status bit index information. The MDS shall use the Echelon file transfer protocol to transfer files from the Propulsion subsystem to the PTU. The individual trace files are distinguished by the file index numbers noted in Table 15. The MDS shall request a specific trace file to be cleared using the nvi00CDTCommand network variable as described in section 4.1.7.

The MDS shall transfer the trace data file to the PTU as binary datum directly without no modification or processing.

6. Self-Installation Data

The following tables define data needed to configure the node's network image to support self-installation.

6.1 Domain Configuration

The LonTalk protocl probides for transport of variables from node to node across the network. As part of this mechanism each physixal node can be assigned up to domains, with a logical node address. The Denver RTD car monitoring network shall be operated in one domain. Domail index '0' shall be used for all subsystems. This domain shall be zero length.

6.2 Location Configuration

The location string shall be updated by MELCO after power-up according to its physical installation location.

The Neuron C source code configuration data declaration shall include:

```
config_data.location[0] = 'P';
config_data.location[1] = 'R';
config_data.location[2] = 'O';
config_data.location[3] = 'P';
config_data.location[4] = ' ';
```

For A~~Single Car and~~ Car A of married pair configurations:

```
config_data.location[5] = 'A';
```

For Car B of married pair configurations:

```
config_data.location[5] = 'B';
```

6.3 Address Configuration

Table 16: Address Table

ENTRY	TYPE	DOMAIN	NODE	REPEAT TIMER	RETRY	RECEIVE TIMER	TRANSMIT TIMER	SUBNET
0	1	0	1	0	3	0	4	1
1	1	0	1	0	3	0	4	2
2	0	0	0	0	0	0	0	0
3	0	0	0	0	0	0	0	0
4	0	0	0	0	0	0	0	0
5	0	0	0	0	0	0	0	0
6	0	0	0	0	0	0	0	0
7	0	0	0	0	0	0	0	0
8	0	0	0	0	0	0	0	0
9	0	0	0	0	0	0	0	0
10	0	0	0	0	0	0	0	0
11	0	0	0	0	0	0	0	0
12	0	0	0	0	0	0	0	0
13	0	0	0	0	0	0	0	0
14	0	0	0	0	0	0	0	0

6.4 Network Variable Configuration

Table 17: Network Variable Configuration

ENTRY	VARIABLE	DIRECTION	PRIO	SERVICE	A ~~SINGLE CAR OR~~ CAR A		CAR B	
					SELECTOR (NOTE 1)	ADDRESS INDEX	SELECTOR (NOTE 1)	ADDRESS INDEX
0	nci00NetConfig	0 (IN)	0	ACKD	0x0216	0x0F	0x0296	0x0F
1	nvi00ObjRequest	0 (IN)	0	ACKD	0x0201	0x0F	0x0281	0x0F
2	nvo00ObjStatus	1 (OUT)	0	ACKD	0x0202	0x00	0x0282	0x01
3	nvi00TimeStamp	0 (IN)	0	UN ACKD_RPT	0x0803	0x0F	0x0803	0x0F
4	nvi00FileReq	0 (IN)	0	ACKD	0x0204	0x0F	0x0284	0x0F
5	nvo00FileStat	1 (OUT)	0	ACKD	0x0205	0x00	0x0285	0x01
6	nvi00CDTCommand	0 (IN)	0	ACKD	0x0211	0x00	0x0291	0x01
7	nvi01Subscribe	0 (IN)	0	ACKD	0x0206	0x0F	0x0286	0x0F
8	nvi01CDTParameter	0 (IN)	0	UN ACKD	0x0107	0x0F	0x0187	0x0F
9	~~nvi01TransferState~~ C nvi01TransferSta	0 (IN)	0	UN ACKD	0x0109	0x0F	~~0x0189~~ C 0x0109	0x0F
10	nvo01StatusBits	1 (OUT)	0	ACKD	0x020A	0x00	0x028A	0x01
11	nvo01StatusBits2	1 (OUT)	0	ACKD	0x020B	0x00	0x028B	0x01
12	nvo01Parameter	1 (OUT)	0	UN ACKD	0x020C	0x00	0x028C	0x01
13	nvi02SCIUpdateReq	0 (IN)	0	ACKD	0x020D	0x0F	0x028D	0x0F
14	~~nvo02SCIUpdateResp~~ C nvo02SCIUpdateRp	1 (OUT)	0	ACKD	0x020E	0x00	0x028E	0x01
15	~~nvi03SCIVersionReq~~ C nvi03SCIVerReq	0 (IN)	0	ACKD	0x020F	0x0F	0x028F	0x0F
16	nvo03SCIVersion	1 (OUT)	0	ACKD	0x0210	0x00	0x0290	0x01

Note1: Bit 7 (bit mask 0x0080) of the variable selector is set to zero (0) for A ~~a single car or~~ car A in a married pair and set to one (1) for car B in a married pair.

Note2: Turnaround and Authentication are set to zero (0) for all variables listed.